SEWAGE PUMPS

SWH200 Features

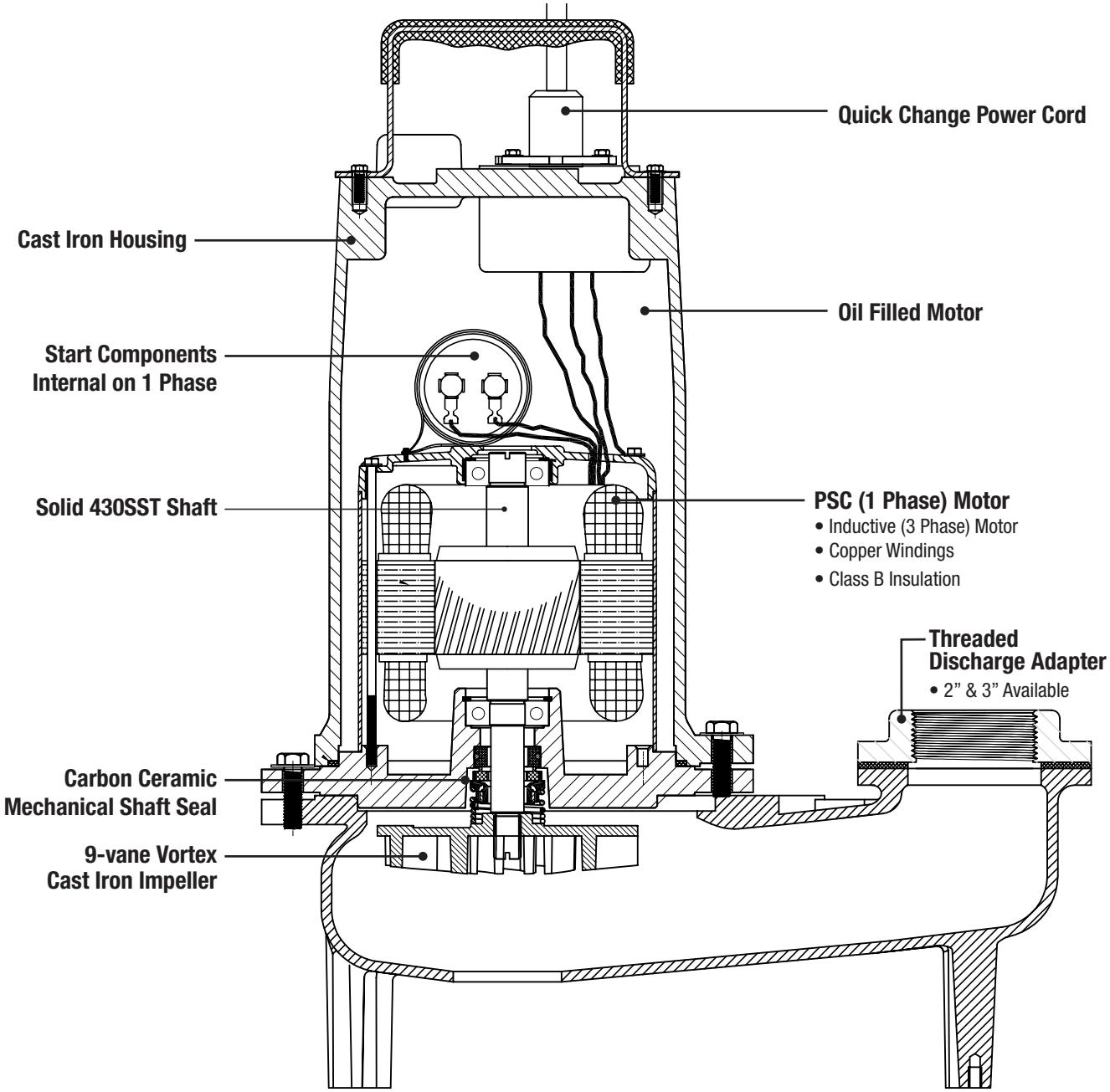

Ashland

P U M P

Honest, Professional, Dependable

1899 Cottage Street, Ashland, Ohio 44805

Telephone: 855 281-6830 • Fax: 877 326-1994 • ashlandpump.com