SOLIDS HANDLING PUMPS

# Model: 8ANC5000

| Physical Data: | |
|---|---|
| DISCHARGE SIZE | 8” |
| IMPELLER TYPE | 2 Vane Enclosed |
| CABLE LENGTH | 35’ |
| **Liquid Handling:** | |
| SOLIDS HANDLING | 3” |
| MAXIMUM LIQUID TEMP. | 140°F – Intermittent<br>104°F - Continuous |
| ACCEPTABLE PH RANGE | 6-8 |
| **Temperature:** | |
| WINDING INSULATION | 155°C |
| INSULATION CLASS | F |
| **Technical Data:** | |
| POWER CORD TYPE | SOOW |
| SENSOR CORD TYPE | SOOW |
| MOTOR HOUSING | Cast Iron |
| CASING | Cast Iron |
| IMPELLER | Cast Iron |
| MOTOR SHAFT | 410 SS |
| HARDWARE | SST |
| “O” RINGS | Viton™ |
| MECHANICAL SEALS | Inboard Mechanical Seal: Carbon-ceramic<br>Outboard Mechanical Seal: Silcon-carbide |
| UPPER BEARING | 6310 |
| LOWER BEARING | 3314 |
| **Electrical Data:** | |
| R.P.M. | 1750 |
| MOTOR TYPE | Squirrel-cage Induction |
| GEN INSULATION CLASS | F |
| STATOR WINDING CLASS | F |
| WINDING INSULATION TEMP | 155ºC |
| VOLTAGE TOLERANCE | ±10% |
| HP | 50 |
| VOLTAGE | 460 |
| PHASE | 3 |
| SERVICE FACTOR | 1.0 |

| MODEL | HP | HZ | VOLTS/PH | RPM | FULL LOAD AMPS | NEMA START CODE | CORD TYPE | CORD SIZE | CORD O.D. | POTENTIAL RELAY | START CAPACITOR | RUN CAPACITOR |
|---|---|---|---|---|---|---|---|---|---|---|---|---|
| 8ANC5000 | 50 | 60 | 460/3 | 1750 | 60 | G | SOOW | 6AWG | 1.08 | N/A | N/A | N/A |

## Features

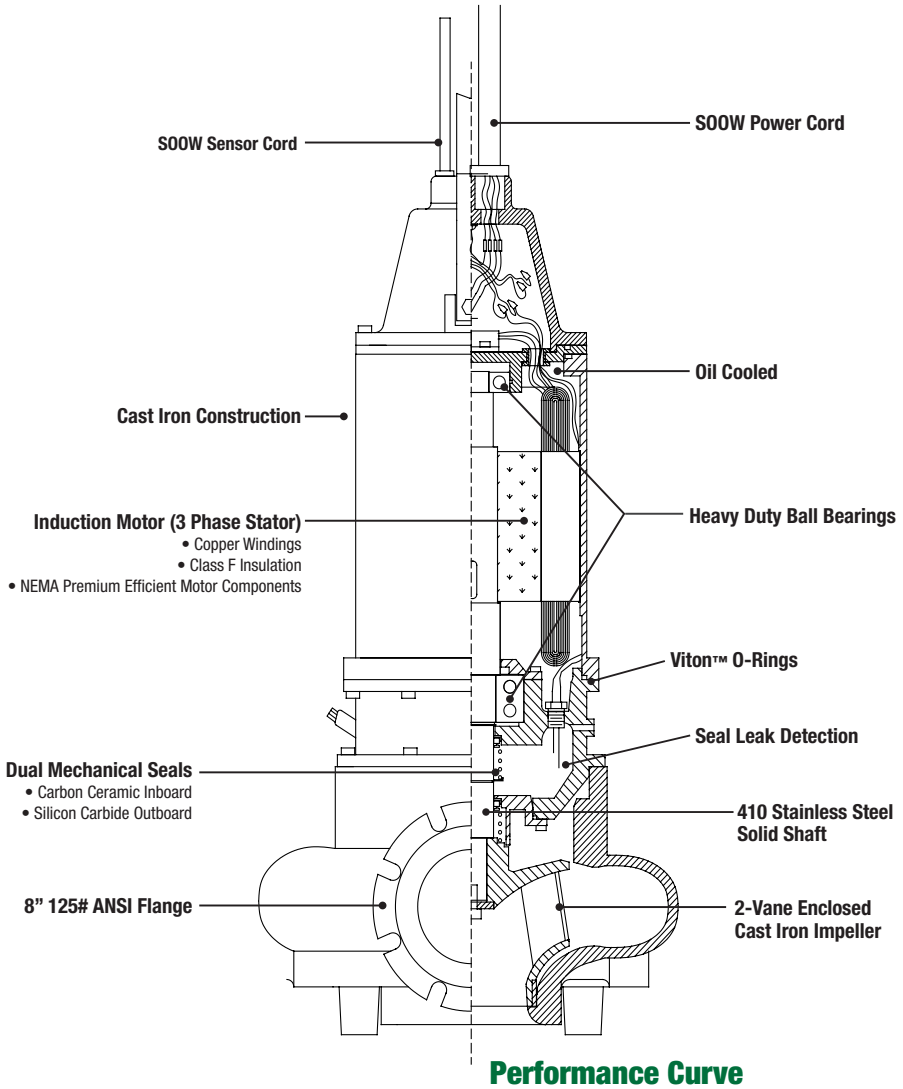


## Dimensions

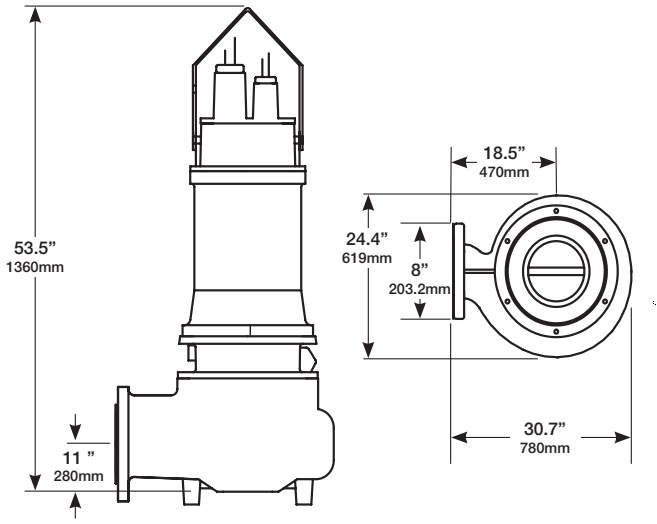


## Performance Curve

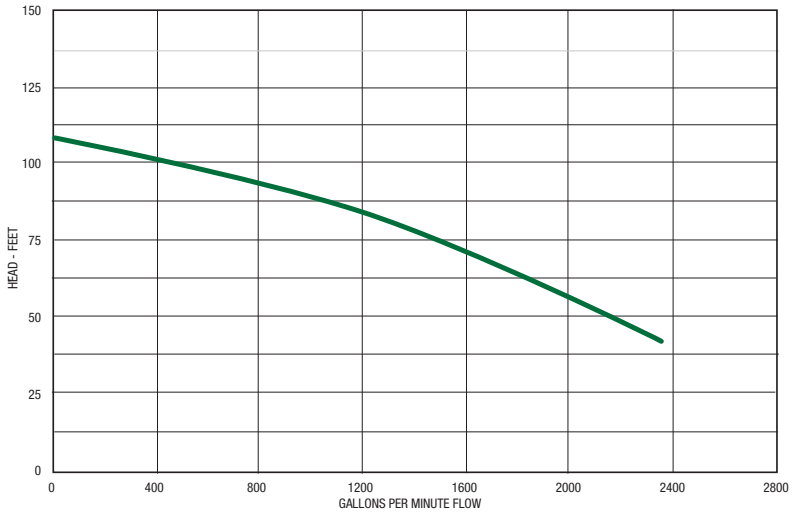



Ashland

P U M P

*Honest, Professional, Dependable*

1899 Cottage Street, Ashland, Ohio 44805

Telephone: 855 281-6830 • Fax: 877 326-1994 • ashlandpump.com


AP-0302/8ANC5000-rev.10/2019